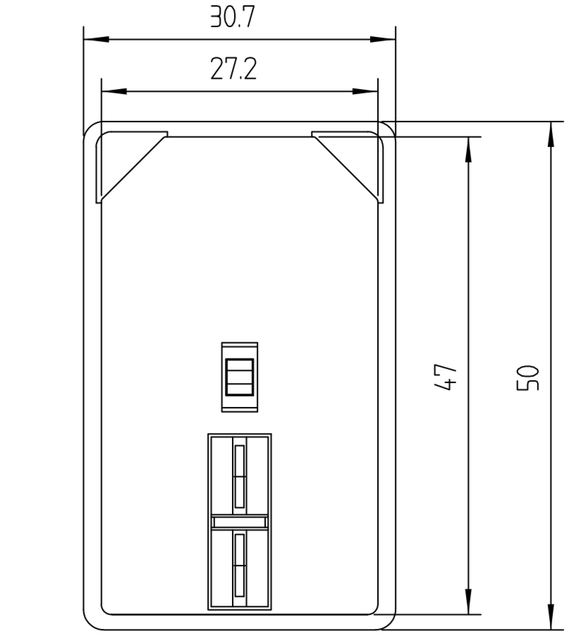

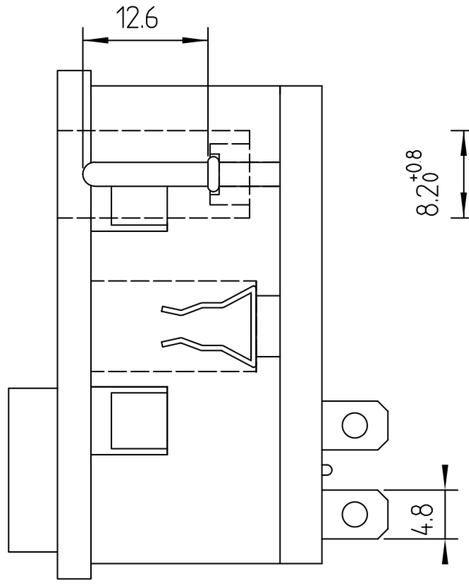

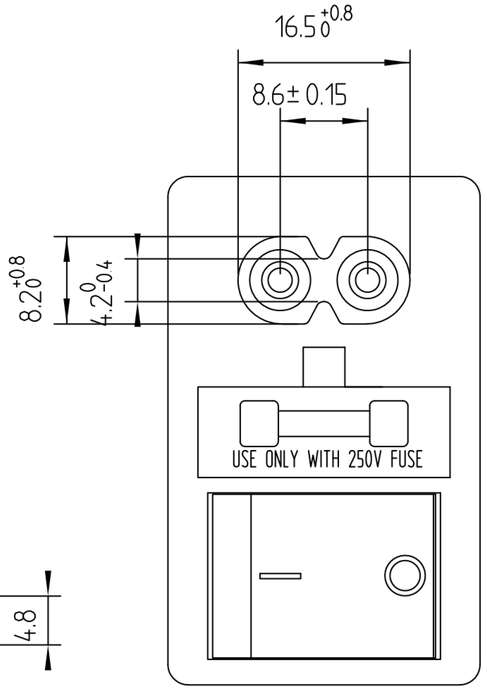

CODE	DIMENSION
A	0.8
	1
	1.5
	2

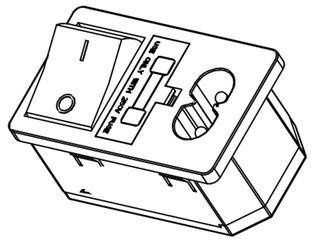

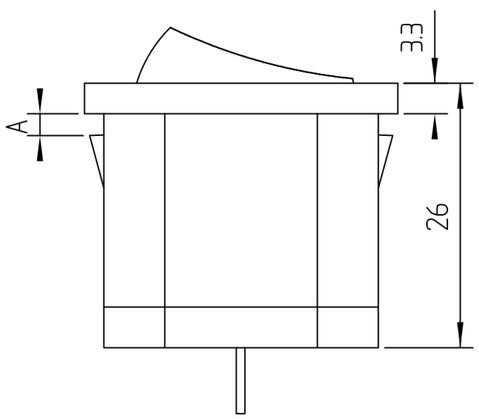

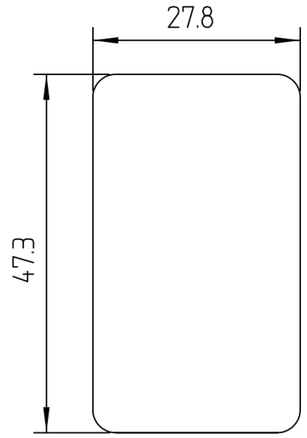

PANEL CUT-OUT

SPECIFICATION

1. RATING: 2.5A 250V~ VDE, KC, CCC
   5A&6A 250V~ UL
2. INSULATION RESISTANCE: 100MΩ MIN, AT 500V DC
3. ELECTRIC STRENGTH: AC 2000V FOR ONE MINUTE

ITEM NO.	DESCRIPTION	DRAWN	DATE

東莞市高迪電子有限公司
DONG GUAN GAO DI ELECTRONICS CO. , LTD

TOLERANCE UNLESS OTHERWISE STATED : Up to 5 ±0.2; Above 5 ~ 15 ±0.3; Above 15 ~ 30 ±0.4; Above 30 ~ 50 ±0.5; Angle ±0.3°

3RD. ANGEL'S | UNITS MM

DRAWN BY: Ming Ming Zou	DATE 10/31/13	MAT'L	
CHECKED BY: Ning Ning Su	DATE 10/31/13	FINISH	
APPROVED BY: Jia Xiang	DATE 10/31/13	SCALE	1 : 1
		SHEET NO.	1 of 1

TITLE	SWITCH+JACK		
MODLE	AC POWER SOCKET		
DWG NO.	GD-DB-8-1P	SIZE	A4
PART NO.		VER	R